XT141C

Two Stages Digital Controller with 2 Set Points and PID Action on Output 1

1. GENERAL WARNING

1.1 ⚠ PLEASE READ BEFORE USING THIS MANUAL

- This manual is part of the product and should be kept near the instrument for easy and quick reference.
- The instrument shall not be used for purposes different from those described hereunder. It cannot be used as a safety device.
- Check the application limits before proceeding.

1.2 ⚠ SAFETY PRECAUTIONS

- Check the supply voltage is correct before connecting the instrument.
- Do not expose to water or moisture: use the controller only within the operating limits avoiding sudden temperature changes with high atmospheric humidity to prevent formation of condensation
- Warning: disconnect all electrical connections before any kind of maintenance.
- The instrument must not be opened.
- In case of failure or faulty operation send the instrument back to the distributor or to "DIXELL s.r.l." (see address) with a detailed description of the fault.
- Consider the maximum current which can be applied to each relay (see Technical Data).
- Ensure that the wires for probes, loads and the power supply are separated and far enough from each other, without crossing or intertwining.
- In case of applications in industrial environments, the use of mains filters (our mod. FT1) in parallel with inductive loads could be useful.

2. GENERAL DESCRIPTION

The XT141C is a two-stage ON/OFF controller for temperature, humidity and pressure applications with direct or inverse action, user-selectable. Output 1 can be programmed by the installer for PID, PD, or ON/OFF control. At start up SOFT START function can be activated which enables the set point to be reached gradually. Output 2 is always with ON/OFF control. The analogue input type can be set by parameter between the following, according to the model:

- PTC, NTC;
- PTC, NTC, Pt100, Thermocouple J, K, S;
- 4÷20mA, 0÷1V, 0÷10V.

3. FIRST INSTALLATION

3.1 PROBE SETTING

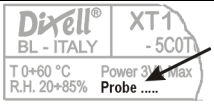

The pre-set probe type is written on the label of the instrument, see picture. If it is different from the probe that has be used, set the probe following procedure below

3.1.1 How to set the probe.

1. Enter the programming menu by pressing the **SET+ ⌄** for 3s.
2. Select the **Pbc (Probe configuration)** parameter and push the **SET** key.
3. Set the kind of probe:
   a. **Controller for temperature**: **Pt**= Pt100, **J** = J thermocouple, **c** = K thermocouple, **S** = S thermocouple; **Ptc** = PTC; **ntc** = ntc.
   b. **Controller with current or voltage inputs: cur**=4÷20mA, **0-1**= 0÷1V, **10**= 0÷10V
4. Push the **SET** key to confirm it.
5. Switch the controller **off** and **on** again.

NOTE: Before proceeding check and, if necessary, set with appropriate values the **Minimum Set Points (LS1 e LS2) and Maximum Set Points (US1 e US2). See also the paragraphs concerning the programming.**

4. FRONT PANEL COMMANDS

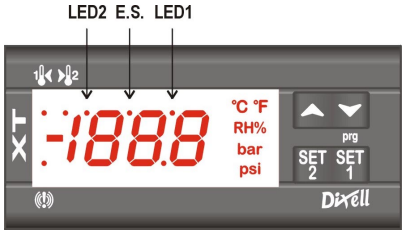

SET1: To display and modify target set point1; in programming mode it selects a parameter or confirm an operation.
TO SWITCH THE INSTRUMENT ON/OFF: If the function is enabled (par. onF=yES), by pressing the SET key for more than 4s the controller is switched OFF. To switch the instrument on again press the SET key.

SET2: To display target set point2.

⌃ **UP**: in programming mode it browses the parameter codes or increases the displayed value. Hold it pressed for a faster change

⌄ **DOWN:** in programming mode it browses the parameter codes or decreases the displayed value. Hold it pressed for a faster change

KEY COMBINATIONS:

⌃ + ⌄ To lock & unlock the keyboard.

SET + ⌄ To enter in programming mode.

SET + ⌃ To return to the room temperature display.

4.1 USE OF LEDS

A series of light points on the front panels is used to monitor the loads controlled by the instrument. Each LED function is described in the following table.

LED	MODE	FUNCTION
1	ON	Output 1 enabled
2	ON	Output 2 enabled
LED1	Flashing	- Programming Phase (flashing with LED2)
LED2	Flashing	- Programming Phase (flashing with LED1)
E.S.	ON	Energy saving activated by digital input
(!)	ON	- ALARM signal - In "**Pr2**" indicates the parameter is also present in "Pr1"

4.2 TO SEE THE SETPOINT1 (OR SETPOINT2)

1. Push and release the **SET1 (SET2)** key to see the Set point value;
2. To come back to the normal display push again the **SET1 (SET2)** key or wait 10s.

4.3 TO CHANGE THE SETPOINT1 (OR SETPOINT2)

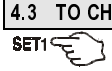

1. Hold pushed for 2s the SET1 (SET2) key to change the Set point value;
2. The value of the set point will be displayed and the LED1 & 2 start blinking;
3. To change the Set value push the ⌃ or ⌄ arrows within 10s.
4. To memorise the new set point value push the **SET1 (SET2)** key again or wait 10s.

4.4 TO ENTER THE PARAMETERS LIST "PR1

To enter the parameter list "Pr1" (user accessible parameters) operate as follows:

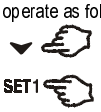

1. Push for 3s the **SET1 + DOWN** keys (LED1 & 2 start blinking).
2. The controller will display the first parameter present in the Pr1 menu..

4.5 TO ENTER THE PARAMETERS LIST "PR2"

The "Pr2" parameter list contains the configuration parameters. A security code is required to enter it.

1. Enter the "**Pr1**" level, see above paragraph.
2. Select "**Pr2**" parameter and press the "**SET1**" key.
3. The "**PAS**" flashing message is displayed, shortly followed by "**0 - -**" with a flashing zero.
4. Use ⌃ or ⌄ to input the security code in the flashing digit; confirm the figure by pressing "**SET1**".

The security code is "321".

5. If the security code is correct the access to "Pr2" is enabled by pressing "**SET1**" on the last digit.

Another possibility is the following:
After switching ON the instrument, within 30 seconds, push **SET1** and **DOWN** keys together for 3s: the Pr2 menu will be entered.

4.6 HOW TO MOVE A PARAMETER FROM THE "PR2" MENU TO "PR1" AND VICEVERSA.

Each parameter present in "**Pr2**" MENU can be removed or put into "**Pr1**", user level, by pressing **"SET1 + ⌄"**.
In "**Pr2**" when a parameter is present in "**Pr1**" the LED (!) is on.

4.7 HOW TO CHANGE A PARAMETER

To change a parameter value operates as follows:

1. Enter the **Programming mode**
2. Select the required parameter.
3. Press the "**SET1**" key to display its value.
4. Use "**UP**" or "**DOWN**" to change its value.
5. Press "**SET1**" to store the new value and move to the following parameter.

TO EXIT: Press **SET1 + UP** or wait 15s without pressing a key.
NOTE: the set value is stored even when the procedure is exited by waiting the time-out to expire.

4.8 HOW TO LOCK THE KEYBOARD

1. Keep pressed for more than 3 s the ⌃ and ⌄ keys.
2. The "POF" message will be displayed and the keyboard will be locked. At this point it will be possible only to see the set point or the MAX o Min temperature stored
3. If a key is pressed more than 3s the "POF" message will be displayed.

4.9 HOW TO UNLOCK THE KEYBOARD

Keep pressed together for more than 3s the ⌃ and ⌄ keys, till the "**Pon**" message will be displayed.

4.10 ON/OFF FUNCTION

TO SWITCH THE INSTRUMENT ON/OFF: If the function is enabled (par. **onF=yES**), by pressing the **SET1** key for more than 4s the controller is switched OFF. To switch the instrument on again press the **SET1** key.

5. PROBES AND MEASURING RANGE

Probe	Down Scale	Full Scale
NTC	-40°C/-40°F	110°C / 230 °F
PTC	-50°C / -58°F	150°C / 302°F
Pt100	-200°C / -328°F	600°C / 1112°F
TcK	0°C / 32°F	1300°C / 1999°F
TcJ	0°C / 32°F	600°C / 1112°F
TcS	0°C / 32°F	1400°C / 1999°F

6. LIST OF PARAMETERS

REGULATION

Hy1 Intervention differential for set point1 (-Full Sc. / Full Sc.).). The temperature differential relating to Set Point 1 is used only when the ON/OFF function is selected. It can be set with positive value or with negative value. The kind of action depends on the **S1C** parameter: **dir** = direct or **in** = inverse.

Hy2 Intervention differential for set point2: (-Full Sc. / Full Sc.). It can be set with positive value or with negative value. The kind of action depends on the S2C parameter: **dir** = direct or **in** = inverse.

Ft Regulation type: **onF** = ON/OFF regulation; **db**= NOT SELECT ; **Pid** = PID regulation; **tt**: NOT SELECT;.

LS1 Minimum set point1: (Down Sc.÷ Set1) Sets the minimum acceptable value for the set point1.

LS2 Minimum set point2: (Down Sc.÷ Set2) Sets the minimum acceptable value for the set point2.

US1 Maximum set point1: (Set1÷ Full Sc.) Sets the maximum acceptable value for set point1.

US2 Maximum set point2: (Set2÷ Full Sc.) Sets the maximum acceptable value for set point2.

ouC Output connections (**diP**=dependent; **ind**=independent) select if SET2 is independent from SET1 or if the SET2 depends on SET1 (so Set2= SET1+SET2).

S1C Action type output 1: **S1C=in** inverse action (heating/ humidifying /increase pressure); **S1C=dir** direct action (cooling / dehumidifying /decrease pressure).

S2C Action type output 2: **S2C=in** inverse action (heating/ humidifying /increase pressure); **S2C=dir** direct action (cooling / dehumidifying /decrease pressure).

AC Anti-short cycle delay: (0÷250 sec) Minimum time between the switching off and the following switching on

on Minimum time a stage stays switched ON (0÷250 sec)

ono: Minimum time between 2 following switching ON of the same load (0÷120 min).

ALARMS

ALC Alarms configuration: it determines if alarms are relative to set point1 or referred to absolute values.
rE relative to set point1; **Ab** absolute temperature

ALL Minimum alarm:
with ALC=rE: relative to set point1, (0÷|Down Sc.-Set1|) this value is subtracted from the set point1. The alarm signal is enabled when the temperature goes below the "SET1-ALL" value.
with ALC=Ab absolute temperature, (Down Scale ÷ ALu) minimum alarm is enabled when the temperature goes below the "ALL" value.

ALU Maximum alarm:
with ALC=rE: alarm relative to set point1, (0÷|Full Sc.-Set1|) Maximum alarm is enabled when the temperature exceeds the "SET1+ALU" value.
with ALC=Ab: absolute alarm, (ALL÷Full Sc.) Maximum alarm is enabled when the temperature exceeds the "ALU" value.

ALH Temperature alarm for alarm recovery: (0,1÷Full scale) Differential for alarm reset, always positive.

ALd Alarm delay:(0÷999 min) time interval between the detection of an alarm condition and alarm signalling.

dAo Delay of alarm at start-up: (0÷23.5h) time interval between the detection of the alarm condition after instrument power on and alarm signalling.

tbA Status of alarm relay after pushing a key. (XT141C only): oFF = relay disabled; **on =** relay enabled.

AS Alarm relay configuration (XT141C only): cL = 5-6 terminals open with alarm; **oP =** 5-6 terminals closed with alarm.

So1 Output 1 status with faulty probe: So1=**oFF** open; So1=**on** closed.

So2 Output 2 status with faulty probe: So2=**oFF** open; So2=**on** closed.

PID ACTION

Pb Proportional band: (1÷ Full Sc.) is the band below the Set Point 1 within which the proportional action is activated. When the probe signal is below Set1 – Pb the relay output 1 is always on, when the probe signal is above the Set1 the relay output 1 is always off. See also "Proportional Function".

int Integral action time: (0÷ 999sec) it determines how strong is the integral contribution during the PID regulation. The lower "Int" value is the higher power supplied to the system becomes, as a result the temperature (or the controlled signal) will reach the SET1 faster. Int=0 excludes the integral action and the controller will work as PD (proportional-derivative).

dEt Derivative action time: (0÷ 999sec) it determines how strong is the derivative contribution during the PID regulation. The higher "dEt" value is the lower response time of the controller becomes during a suddend temperature change. dEt=0 excludes the derivative action and the controller will work as PI (proportional-integral).

Sr Derivative sampling time: (1 to 10sec) time between two successive readings for the calculation of the derivative function.

rS Proportional band reset: (-Full Sc./ Full Sc.) permits to calibrate up and down the proportional band to adjust the regulation when the display read-out is not exactly Set point value.

Ar Integral band limit: (0°C to Full Scale) if during the PID function the difference between the Set Point1 and the temperature is greater than Ar, the contribution of the integral time is not increased. Therefore at higher values it corresponds to a greater incisiveness of the integral action. Suggested initial value : Ar =Pb/2, if Ar=0 this control is disabled.

Cyt Cycle time: (1 to 500sec) minimum time between two successive relay activation's, once the PID action has been started. Suggested initial value Cyt=13.

drb Soft Start restart band: (0 ÷ Full Scale) value in degrees of the band below the Set point 1 within which the SOFT Start function is disabled. When the controlled signal decreases under the Set point 1 - drb, the Soft Start function restart working.

dSi Set point increment during the Soft Start function: (0 ÷Full Sc.) value, in degrees, of the dynamic increase of the Set Point. With 0 the Soft start function is disabled.

dSt Dynamic Set Point increment interval: (1 to 999sec) time between two successive increments of the dynamic set Point.

PROBES AND DISPLAY

LCI Start of scale, only with current or voltage input: (-1999÷1999) Adjustment of read out corresponding to 4mA or 0V input signal.

UCI End of scale, only with current or voltage input (-1999÷1999) Adjustment of read out corresponding to 20mA or 1V or 10V input signal.

oPb Probe calibration: (-Full sc.÷Full sc.) allows to adjust possible offset of the probe.

rES Decimal point ON/OFF: (rES=**in** OFF; rES=**dE** ON; rES= **cE** with 2 decimal points, only for current or voltage input) select the resolution of the controller.
NOTE: the decimal point selection is not available on models with thermocouple input.

UdM Measurement unit: it depends on models:
for temperature:°C = Celsius; **°F** = Fahrenheit.
with 4÷20mA, 0÷1V, 0÷10V input : 0= °C; **1=** °F, **2=** %RH, **3=**bar, **4=**PSI, **5=**no measurement unit.

PbC Probe selection: it sets the kind of probe. It depends on models
for temperature NTC/PTC: Ptc = PTC; **ntc** = ntc.
for temperature standard: Pt= Pt100, **J** = J thermocouple, **c** = K thermocouple, **S** = S thermocouple; **Ptc** = PTC; **ntc** = ntc.
with 4÷20mA, 0÷1V, 0÷10V input : cur=4÷20mA, **0-1=** 0÷1V, **10=** 0÷10V.

P3F Third wire presence for Pt100 probe: for using 2 or 3 wires Pt100 probes: **no =** 2 wires probe; **yES =** 3 wires probe.

DIGITAL INPUT

HES Set point 1 changes during the Energy Saving cycle: (Down Sc./Full Sc.) sets the variation of the set point 1 during the Energy Saving cycle.

i1F Digital input operating mode: configure the digital input function: **c-H** = to invert the kind of action: direct - reverse; **oFF** = to switch the controller off.; **AUS** = Not used; **HES** = Energy Saving; **EAL** = generic external alarm; **bAL** = serious external alarm: it switches off the loads.

i1P Digital input polarity:
CL : the digital input is activated by closing the contact;
OP : the digital input is activated by opening the contact

did Digital input alarm delay: (0÷120 min) delay between the detection of the external alarm condition (i1F= EAL or i1F = bAL) and its signalling.

OTHER

Adr RS485 serial address (0÷247) identifies the instrument within a control or supervising system.

onF Switching ON/OFF enabling from keyboard: (**no** disabled; **yES**=enabled) It permits the switching ON/OFF of the instrument by pressing the SET1 key for more than 4s.

Ptb Parameters table: (read only) Shows the code of the parameters map.

rEL Software release: (read only)

Pr2 To access the Pr2 parameter programming menu.

7. SOFT START FUNCTION

At start up or when the input signal value is lower than the "Set point 1 – drb", the controller uses a dynamic set point to control the system. The step of the dynamic set point is given by the "dSi" parameter value and each step of temperature is controlled during the "dSt" interval time.

For example at the start up, the controller added to the probe value Ta (usually the ambient temperature) the "dSi" value then for the successive time, set with "dSt" parameter, the controller will work to reach this first dynamic set point. This procedure will be repeated until the probe signal value reaches the "Set point – drb" value, at this point the Soft Start is disabled and the PID function will control the system. When the controlled signal goes out of the band then the Soft Start function restarts.

By setting "drb=0" the Soft Start function is manually disabled, in this case the relay output is always on until the temperature will enter within the Proportional Band value.

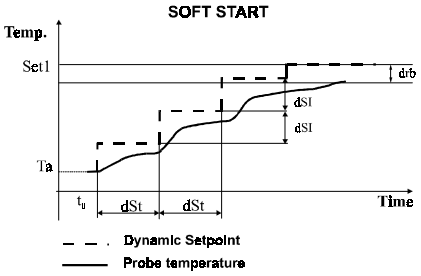

8. PROPORTIONAL FUNCTION

The PID function modulates the activation of the first output using an appropriate ON/OFF cycle: the duration of the cycle is imposed by the parameter "Cyt". If the factory set values of the parameters relating to the PID control are not are not optimised for the process being controlled, you can utilise the following method to find more appropriate parameter values:

1) Select ON/OFF control Ft=1.
2) Impose Set 1 = 10% less than the normal working temperature (as long as it is compatible with the characteristic of the process being controlled).
3) Impose the differential Hy1 = 3% of the value of the SET 1.
4) Start the process from the start up and wait until the temperature control settles and cycles regularly.
5) Monitor the process temperature (possibly with a chart recorder) recording the values at regular intervals. In this way it is possible to determine the time between 2 successive maximum (Tp) and maximum variations in temperature (dT) see fig.

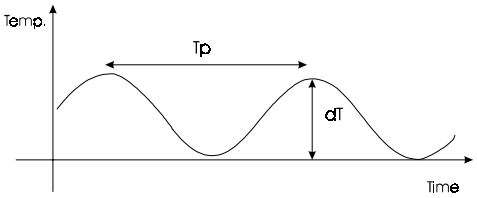

Values for "Pb", "Int", "dEt", "Cyt" will be obtained by the following method: Pb = 2xdT, Int = Tp/2, dEt = Tp/8, Cyt = Tp/20.

Other adjustments around these values can be made bearing in mind that:

- **Proportional action** depends on the deviation between the set point and the relative value.
- **Derivative action** takes account the speed of the variations of the controlled process.
- **Integral action** integrates the deviation of the process in time.

NOTE:

An increase of the proportional band reduces the oscillations but increases the deviation, use "Rs" parameter to adjust the band.

An excessive decrease of the proportional band reduces the deviation but increases the system oscillations.

A decrease in the value of "Integral action time" leads to an increased incisiveness of the integral action and annuls the deviation at full speed.

A small but constant deviation can lead to a large contribution of the integral action.

9. INSTALLATION AND MOUNTING

XT141C shall be mounted on vertical panel, in a 29x71 mm hole, and fixed using the special brackets supplied.

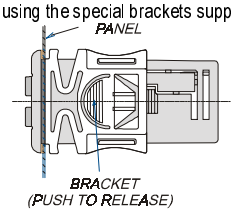

To obtain an IP65 protection grade use the front panel rubber gasket (mod. RG-C).
The temperature range allowed for correct operation is 0÷60 °C. Avoid places subject to strong vibrations, corrosive gases, excessive dirt or humidity. The same recommendations apply to probes. Let air circulate by the cooling holes.

10. ELECTRICAL CONNECTIONS

The instruments are provided with screw terminal block to connect cables with a cross section up to 2,5 mm^2. Before connecting cables make sure the power supply complies with the instrument's requirements. Separate the input connection cables from the power supply cables, from the outputs and the power connections. Do not exceed the maximum current allowed on each relay, in case of heavier loads use a suitable external relay.

11. SERIAL CONNECTIONS

All models can be connected to the monitoring and supervising system XJ500 using the serial port. The external XJ485 serial module to interface the instrument with the monitoring and supervising system XJ500 is required.
The standard ModBus RTU protocol it is used.
NOTE: Instruments with current or voltage input and 230V or 115V supply, cannot be connected to the XJ485 serial module.

12. HOW TO USE THE HOT KEY

12.1 HOW TO PROGRAM A HOT KEY FROM THE INSTRUMENT (UPLOAD)

1. Program one controller with the front keypad.
2. When the controller is ON, insert the "**Hot key**" and push ▲ key; the **"uPL"** message appears followed a by flashing **"End"**
3. Push "**SET**" key and the **End** will stop flashing.
4. Turn OFF the instrument remove the **"Hot Key"**, then turn it ON again.

NOTE: the "**Err**" message is displayed for failed programming. In this case push again ▲ key if you want to restart the upload again or remove the "**Hot key**" to abort the operation.

12.2 HOW TO PROGRAM AN INSTRUMENT USING A HOT KEY (DOWNLOAD)

1. Turn OFF the instrument.
2. Insert a **programmed "Hot Key" into the 5 PIN receptacle** and then turn the Controller ON.
3. Automatically the parameter list of the **"Hot Key"** is downloaded into the Controller memory, the "**doL**" message is blinking followed a by flashing **"End".**
4. After 10 seconds the instrument will restart working with the new parameters.
5. Remove the **"Hot Key".**.

NOTE the message "**Err**" is displayed for failed programming. In this case turn the unit off and then on if you want to restart the download again or remove the "**Hot key**" to abort the operation.

13. DIGITAL INPUT

XT141C has 1 free contact digital input. It is programmable in 5 different configurations by the "**i1F**" parameter.

13.1 INVERT THE KIND OF ACTION: HEATING-COOLING (I1F = C-H)

This function allows to invert the regulation of the controller for both the outputs: from direct to inverse and viceversa.

13.2 REMOTE ON/OFF (I1F = OFF)

This function allows to switch ON and OFF the instrument.

13.3 GENERIC ALARM (I1F = EAL)

As soon as the digital input is activated the unit will wait for "**did**" time delay before signalling the "**EAL**" alarm message. The outputs status don't change. The alarm stops just after the digital input is de-activated.

13.4 SERIOUS ALARM MODE (I1F = BAL)

When the digital input is activated, the unit will wait for "**did**" delay before signalling the "**bAL**" alarm message. The relay outputs are switched OFF. The alarm will stop as soon as the digital input is de-activated.

13.5 ENERGY SAVING (I1F = HES)

The Energy Saving function allows to change the set point1 value as the result of the SET1+ HES (parameter) sum. This function is enabled until the digital input is activated.

14. ALARM SIGNALS

Message	Cause	Outputs
"PFo"	Probe broken or absence	Alarm output ON; Output 1 and 2 according parameters "So1" and "So2" respectively.
"PFc"	Probe short circuited	Alarm output ON; Output 1 and 2 according parameters "So1" and "So2" respectively.
"HA"	Maximum temperature alarm	Alarm output ON; Other outputs unchanged.
"LA"	Minimum temperature alarm	Alarm output ON; Other outputs unchanged.
"EAL"	External alarm	Output unchanged.
"bAL"	Serious external alarm	Output OFF.

14.1 ALARM RELAY STATUS (XT141C)

Status of the instrument	AS = CL	AS = oP
Instrument off	5-6 closed	5-6 closed
Normal operating	5-6 closed	5-6 open
Alarm present	5-6 open	5-6 closed

14.2 SILENCING BUZZER / ALARM RELAY OUTPUT

Once the alarm signal is detected the buzzer, if present, can be disabled by pressing any key.
XT141C: the alarm relay status depends on the tbA parameter: with tbA=yES the relay is disabled by pressing any key, with tbA=no the alarm relay remains enabled as long as the alarm lasts. The display signal remains as long as the alarm condition remains.

14.3 ALARM RECOVERY

Probe alarms "**PFo**", "**PFc**" start few seconds after the fault in the probe; they automatically stop few seconds after the probe restarts normal operation. Check connections before replacing the probe.
Max. and min. alarms "**HA**" and "**LA**" automatically stop as soon as the variable returns to normal values.
Alarms "**bAL**" and **"EAL"** recover as soon as the digital input is disabled.

15. TECHNICAL DATA

Housing: self extinguishing ABS.
Case: frontal 32x74 mm; depth 60mm;
Mounting: panel mounting in a 71x29 mm panel cut-out.
Protection: IP20.
Frontal protection: IP65 with frontal gasket RG-C (optional).
Connections: Screw terminal block ≤ 2,5 mm^2 heat-resistant wiring.
Power supply: 12Vac/dc, ±10% or: 24Vac/dc ± 10%
or 230Vac ± 10%, 50/60Hz or 110Vac, ± 10%, 50/60Hz
Power absorption: 3VA max.
Display: 3 ½ digits, red LED
Inputs: according to the order: NTC/PTC or NTC/PTC /Pt100 /Thermocouple J, K, S or 4÷20mA/ 0÷1V / 0÷10V
Relay outputs:
Output1: relay 8(3)A, 250Vac
Output2: relay 8(3)A, 250Vac
Alarm: 8(3)A, 250Vac
Other output: buzzer (optional)
Kind of action: 1B.; **Pollution grade:** normal;
Software class: A.
Data storing: on the non-volatile memory (EEPROM).
Operating temperature: 0÷60 °C (32÷140°F).
Storage temperature: -30÷85 °C (-22÷185°F).
Relative humidity: 20÷85% (no condensing)
Measuring and regulation range: according to the probe
Controller Accuracy a 25°C: better than ±0,5% of full scale

16. CONNECTIONS

16.1 XT141C – 12VAC/DC OR 24VAC/DC

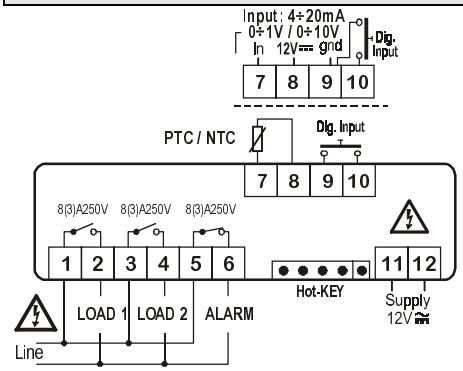

Probe: Pt100= 7 – 9 (8); **Thermocouple J, K, S** = 7(+); 9(-)
24Vac/cd supply: 11-12

16.2 XT141C – 230V AC OR 115V AC

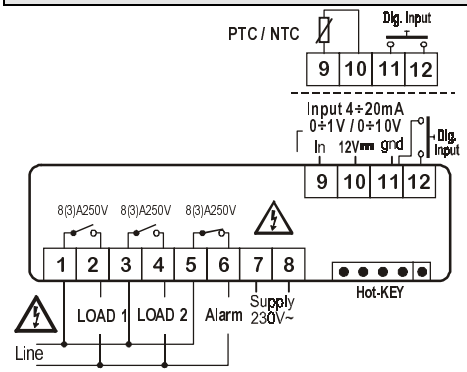

Probe: Pt100=9–11 (10); **Thermocouple J, K, S**= 9(+) - 11(-)
115Vac supply: 7-8

17. DEFAULT SETTING VALUES

COD	Name	Range	°C/°F	Lev
Set1	Set point1	LS1÷US1	0/32	-
Set2	Set point2	LS2÷US2	1/34	-
Hy1	Differential 1	-Full Sc./ Full Sc.	-1/-2	Pr1
Hy2	Differential 1	-Full Sc./ Full Sc.	-1/-2	Pr1
Ft	Regulation Type (ON/OFF, PDI)	onF=ON/OFF; Pld= PID	Pld	Pr2
LS1	Minimum set point1	Down Sc./ Set1	min	Pr2
LS2	Minimum set point2	Down Sc./ Set2	min	Pr2
US1	Maximum set point1	Set1/ Full Sc.	max	Pr2
US2	Maximum set point2	Set2/ Full Sc.	max	Pr2
ouC	Output configuration	ind= independent; diP = dependent	ind	Pr2
S1C	Action type output 1	in= Inverse; dir=direct	in	Pr2
S2C	Action type output 2	in= Inverse; dir=direct	in	Pr2
Ac	Anti-short cycle delay:	0÷250 sec	0	Pr2
on	Minimum time a stage stays switched ON	0÷250 sec	0	Pr2
ono	Minimum time between 2 following switching ON of the same load	0÷120 min	0	Pr2
ALC	Alarm configuration	rE=relat.; Ab= absolute	rE	Pr2
ALL	Minumum alarm (ALC=rE) (ALC=Ab)	0 ÷ |Start Sc.-Set1| Start Sc.÷ ALu	10.0/ 20	Pr2
ALU	Maximum alarm (ALC=rE) (ALC=Ab)	0 ÷ |Full Sc.-Set1|. ALL÷ Full Scale	10.0/ 20	Pr2
ALH	Alarm recovery differential	0÷Full scale	2.0/4	Pr2
ALd	Alarm delay	0÷999 min	15	Pr2
dAO	Alarm delay at start up	0÷23h 50min	1.3	Pr2
tbA	Alarm relay disabling	no; yES	yES	Pr2
AS	Alarm relay polarity	CL÷oP	oP	Pr2
So1	Out1 status with faulty pr.	oFF=open on=closed	oFF	Pr2
So2	Out2 status with faulty pr.	oFF=open on=closed	oFF	Pr2
Pb	Proportional Band	(0.1) 1÷Full Sc.	10	Pr2
int	Integral time	0÷999 s	500	Pr2
dEt	Derivative Time	0÷999s	30	Pr2
Sr	Derivative sampling rate	1÷10s	2	Pr2
rS	Proportional band reset	Down Sc./ Full Sc.	0	Pr2
Ar	Integral band limit	0÷Full Scale	10	Pr2
cyt	Cycle time	1÷500s	30	Pr2
drb	Soft start restart band	0÷Full Scale	20	Pr2
dSi	Increment of dynamic Set point	0÷Full Scale	10	Pr2
dSt	Interval of dynamic Set point increment	1÷999s	120	Pr2
Lci[2]	Start scale with current or voltage input	-1999÷1999	various	Pr1
Uci[2]	End scale with current or voltage input	-1999÷1999	various	Pr1
OPb	Probe calibration	-Full Sc./ Full Sc.	0.0	Pr1
rES	Resolution	in=NO; dE=0,1; cE=0,01	in	Pr2
UdM	Measurement unit (**temp.**) (**current/voltage**)	°C=°C; °F= °F; 0=°C; 1=°F; 2=RH; 3=bar; 4=PSI, 5=off	various	Pr1
PbC	Kind of probe	Pt=Pt100; J=tcJ; c= tck; S=tcS; Ptc=PTC; ntc= NTC; 0-1=0÷1V; 10= 0÷10V; cur=0÷20mA	various	Pr1
P3F	3[d] wire presence	no=2 wires; yES=3 wires	no	Pr2
HES	Energy saving differential	Down Sc./ Full Sc.	0.0	Pr2
i1F	Digital input configuration	c-H / oFF / AuS / HES / EAL / bAL	EAL	Pr2
i1P	Digital input polarity	cL=closing; oP=opening	cL	Pr2
did	Alarm delay for dig. input	0÷120m	0	Pr2
Adr	Serial address	RS485 address	1	Pr2
OnF	oFF function enabling	no=not enabled; oFF=enabled	no	Pr2
Ptb	Parameter table	Readable only	--	Pr2
rEL	Software release	Readable only	---	Pr2
Pr2	To access the Pr2	Readable only	321	Pr1

[2] Only for instrument with 4÷20mA or 0÷1V or 0÷10V